KREA Swiss

hotCHOC

Operating Instructions

Manual de instrucciones

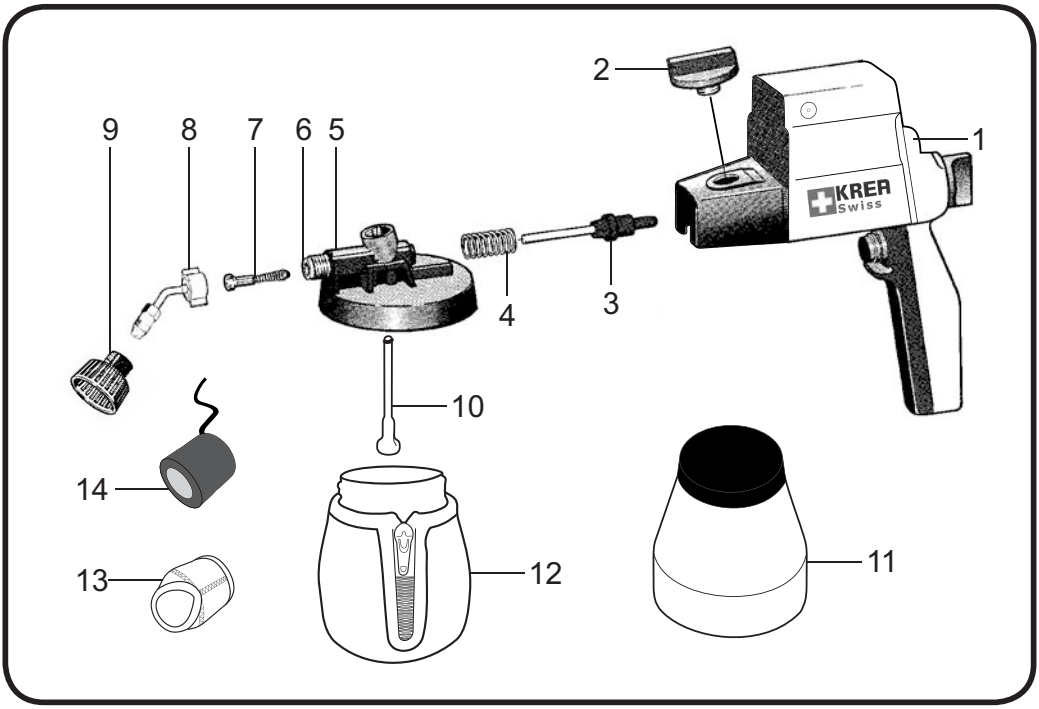

Spare parts and accessories / Repuestos y acesorios: hotCHOC

Pos.	Art. Nº.		
1	12-000-010	Hood	Capò
2	09-004-004	Service screw	Tornillo de servicio
3	12-004-010	Piston	Pistòn
4	12-004-013	Piston spring	Muelle del pistòn
5	12-004-005	Pump housing	Carcaja de la bomba
6	12-005-003	Adapter	Vàlvula de bola
7	12-507-010	Atomiser unit	Inserciòn pulverizadora
8	12-508-220	Nozzle extension	Prolongador de la boquilla
9	09-490-006	Round nozzle R6	Boquilla redonda R6
10	12-005-021	Suction tube	Tubo de succiòn
11	12-000-016	Container & lid	Envase y tapa
12	12-508-201	Container insulation sleeve	Funda de aislaciòn del envase
13	12-508-200	Nozzle insulation sleeve	Funda de aislaciòn de la boquilla
14	Distributor	Nozzle heating unit	Boquilla con unidad de clefacciòn

DESCRIPTION

The hotCHOC spray gun has been designed specifically to spray a mixture of 50% chocolate and 50% cocoa butter at a temperature range of 29°C - 35°C / 84°F - 95°F. The power settings and nozzle & piston sizes enable a thin layer of material to be sprayed, whilst benefitting from reduced overspray or noise compared to other sprayers and air brush systems. Additional features such as insulation and a heating unit are integrated to slow down cooling.

Working with different materials and temperatures than those recommended may affect the performance. More information relating to the sprayers recommended usage is provided below.

Technical Data

Nominal Output:	40 W
Delivery Rate*:	120 - 200 g/min
Viscosity rate*:	20 - 28 DIN/sec
Container Capacity:	550 ml
Weight approx.:	1.3 kg
Sound level**:	75dB

*Based on 50% tempered chocolate, 50% cocoa butter at circa 31°C / 88°F.
** Average, based on approximately 2 meters distance and height.

FOR YOUR SAFETY

The hotCHOC should only be operated safely when the safety & operating instructions have been read and are strictly adhered to.

- At no time should the electrical or the heating components be brought into contact with liquids of any type. Recommended cleaning methods are explained on page 6.

- Only connect the power plug when the sprayer is OFF. The heating sleeve will remain in operation as long as the plug is connected. Always disconnect the plug from the power socket before taking apart. Do not carry by the power cord.

- The sprayer must not be used in locations where explosive gases may occur or to spray inflammable liquids (e.g. petrol or spirits). Ensure that there is adequate ventilation when working in confined spaces.

- Never direct the spray jet towards people or animals as it can cause injury. Keep the sprayer and accessories out of the reach of children.

- The hotCHOC noise level is similar to many kitchen appliances. The decision to use ear protection remains the users responsibility.

GETTING STARTED - tips & tricks

BEFORE STARTING: please ensure that the container is at least 50% full.
Do not use the hotCHOC without material or spray until completely empty. This avoids creating unnecessary noise & vibration and prevents splatter.

Always use clean material that is free of particles.
The hotCHOC is designed to spray only pure fluids. Please avoid materials containing seeds or any type of particles as they may restrict piston movement and shorten the sprayer`s life. In case of doubts regarding any particles, filtering of the material is recommended.

We recommend spraying at 29°C - 35°C / 84°F - 95°F. Why?
When the warm chocolate leaves the nozzle, the small atomised particles will be immediately exposed to the ambient air temperature, normally resulting in a circa 20% drop in chocolate temperature, for e.g. in a working environment of 22°C / 72°F, chocolate in the container at 31°C / 88°F will cool to circa 25°C / 77°F upon reaching the target surface just circa 30 cm later.

In a normal food preparation environment the container can be filled at 35°C / 95°F, knowing that the temperature will have cooled significantly by the time it reaches the target. The container can be used in a hot water bath or microwave up to 70°C / 160°F but of course, please remove the insulation cover first. The container can also be stored in the fridge.

Maximising the period that chocolate remains warm.
Tempered chocolate generally changes back to solid form as it approaches 21°C / 70°F and usually is worked with between 29°C - 35°C / 84°F - 95°F. The hotCHOC sprayer is designed to deliver an even spray pattern even down to around 27°C / 80°F with minimal overspray. The nozzle heater can be expected to maintain an average nozzle extension temperature of around 30°C / 86°F with circa 26°C / 79°F even in the nozzle tip. The nozzle heating starts working when plugged in and should be <u>left plugged in even when changing containers over.</u>

Adding the chocolate mix to the container at 35°C+ / 95°F+ and using the insulation and heating features, it should be possible to continue spraying for as long as an hour without the need to reheat the material.

Fitting the heating unit.
Before filling the container with chocolate, first fit the heating unit to the nozzle extension following the below steps:

i) Ensure the cable and heating unit is dry and free from liquids.
ii) Firmly tighten the black nozzle extension screw to the pump housing.

iii) Without the end basket nozzle, slide the heating unit up and over the black nozzle extension tube screw until it is flush against the pump housing.
iv) Slide on the insulation sock until it reaches the rear end of the heating unit.
v) Screw on the black nozzle.
vi) Plug in the sprayer and leave for 2 or 3 minutes for the heating unit to heat up. Only unplug the sprayer after the heating unit is no longer needed.

Optimum spraying.
To enable a light chocolate covering, the hotCHOC has been specifically configured to spray around 2 grams per second of 50% chocolate and 50% cocoa butter mixture, dependent upon the type and temperature. 500ml can provide a maximum light coverage of 10 - 15 m², or 5 - 8 m² of thicker coating. A light coverage can be achieved with one pass, using a surface pattern of about 10 cm, sprayed approximately 30 cm away from the surface.

- Before starting, turn the power knob completely to the left. This is the maximum power setting and after a few seconds will create sufficient suction to spray the material. Adjust the power knob as required until the sprayer demonstrates a fine spray and makes an even tone.

- Maintain a constant distance and smooth movement.

- Avoid shaking the gun or sharp movements as this will cause droplets.

- Varying the speed of arm movement, the height and number of coatings will vary the effect and thickness of sprayed material.

- It is recommended to start and stop the sideways movement off the product and only press the power button when over the product. This helps reduce the volume being sprayer at the turning point.

- The R6 is the best nozzle for working with chocolate with the hotCHOC.

- If you want to spray from below, you may rotate the nozzle extension - however - *only rotate in a <u>clockwise</u> direction* (when viewed from the front), otherwise you will loosen the nozzle extension. The easiest method of adjusting the nozzle direction is from the right side, hold the pump housing firmly with your left hand and move the nozzle extension with your right hand.

Spraying other materials?
The sprayer is only designed to spray chocolate. Spraying other low viscosity (thin) materials such as oil and light glaze is likely to produce a different effect.

CLEANING

IMPORTANT: Always remove the electrics and heating unit before washing the gun. These parts should never be exposed to liquids.

Always clean immediately after use. For external cleaning, simply wipe down the outside of the sprayer with an approved food grade detergent. For internal cleaning, we recommend to spray half a container of very hot water through and then clean the individual parts using a suitable food safe mild detergent. Careful use of a soft pipe cleaning brush is also recommended but care should be taken not to damage the cylinder by using abrasive or sharp tools. If available, blowing air through the nozzle and suction tube can ease the cleaning process. Rinse thoroughly thereafter with hot fresh water.

The sprayer is designed with quality components. If you experience any issue, we recommend first following the trouble shooting document and films on our website: www.KreaSwiss.com/professional-food-sprayer-guns. In most cases a part has been forgotten or the product needs a thorough cleaning. If your issue persists, please contact your reseller for additional support. Please always include the article number (Page 2) in any correspondence.

DISMANTLING AND ASSEMBLING (see page 2)

- Unscrew the round jet nozzle (9) and slide off the nozzle heating unit (14). Then unscrew the bent nozzle extension (8) from the pump housing (5).

- Remove the 3 piece “atomiser unit” (7) from inside the chamber. The metal adapter (6) should never be removed. Place all parts in a small dish and clean them following the cleaning steps outlined earlier. The suction tube (10), container (11), container insulation sleeve (12) and nozzle insulation sleeve (13) can be washed in the sink.

- Remove the service screw (2) and take off the pump housing (5). Put the piston (3), piston spring (4) and hood (1) to one side and wipe them down as outlined above.

- To assemble the gun, do so in reverse order. The piston should move freely in the pump housing. Ensure the service screw, bent nozzle extension and round jet nozzle pieces are all screwed on tightly.

Guarantee

- The spray gun is guaranteed for six months subject to the enclosed terms and on condition that it is **only used for processing products approved for the food industry.**
- The spray gun is designed to work and rest intermittently and it is not suitable for industrial use, defined as more than three minutes of operation within any eight minute period. A maximum of 550 ml of material may be sprayed within a 3 minute period after which a 5 minute total resting (cooling) period is required before the sprayer may be used again. Should the spray gun be intermittently used, for periods of 20 - 30 seconds at a time, then a resting (cooling) period of 5 - 10 seconds is sufficient. Failure to adhere to the usage & resting (cooling) period will significantly reduce the lifetime of the sprayer and negate the warranty.
- Only original spare parts may be used in the event of repairs.
- The spray gun must be serviced and cleaned as described in the operating instructions.
- The guarantee starts upon customer receipt. The guarantee excludes any damage due to natural wear, overloading or incorrect handling.

REPAIRS & PRODUCT LIABILITY

Repairs are not covered by the guarantee and shall be performed by service centres subject to the applicable price and delivery terms of the country in question.

No liability is accepted for damage caused directly or indirectly by the use and spraying of this products. The user assumes full responsibility for the use of the product in accordance with the laws of food hygiene and other legal regulations.

EN Declaration of Conformity CE
This product meets the required standards as set out in the following norms:
EN 50144-1:98 +A1:02 +A2:03, EN 50144-2-7:00, EN 50366:03 + A1:06,
EN 55014-1:06 + A1:09 + A2:11, EN 55014-2:97 + A1:01 + A2:08, EN 61000-3-2:06 +A1:09 +A2:09,
EN 61000-3-3:08, EN 62233:08

All relevant plastic components coming into contact with sprayed material are certified as consisting of food grade materials.

KREA Swiss

Dr. S. Kendrick

A. Hitschrich